(Cont. next page)

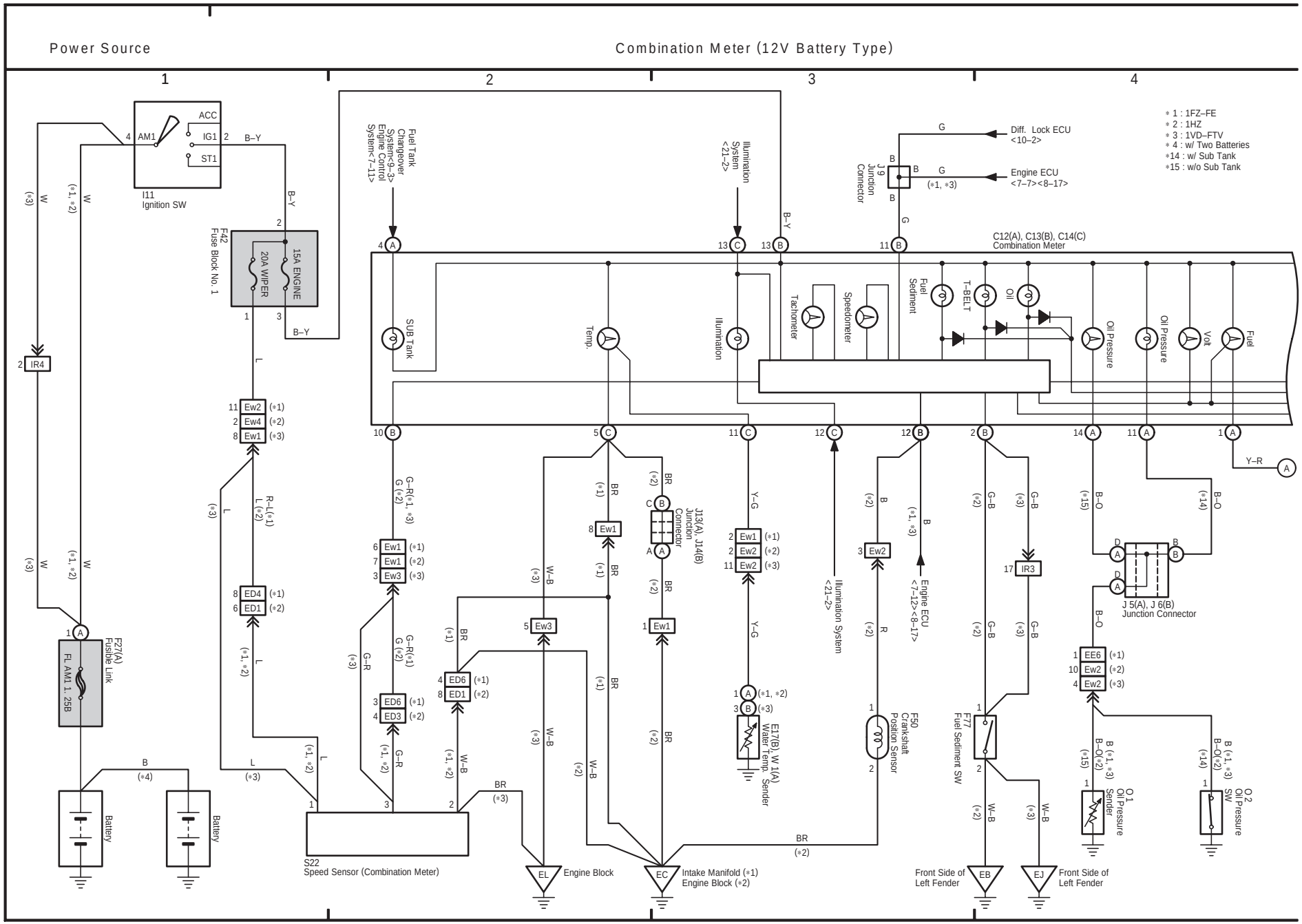

(Cont. next page)

Combination Meter (12V Battery Type)

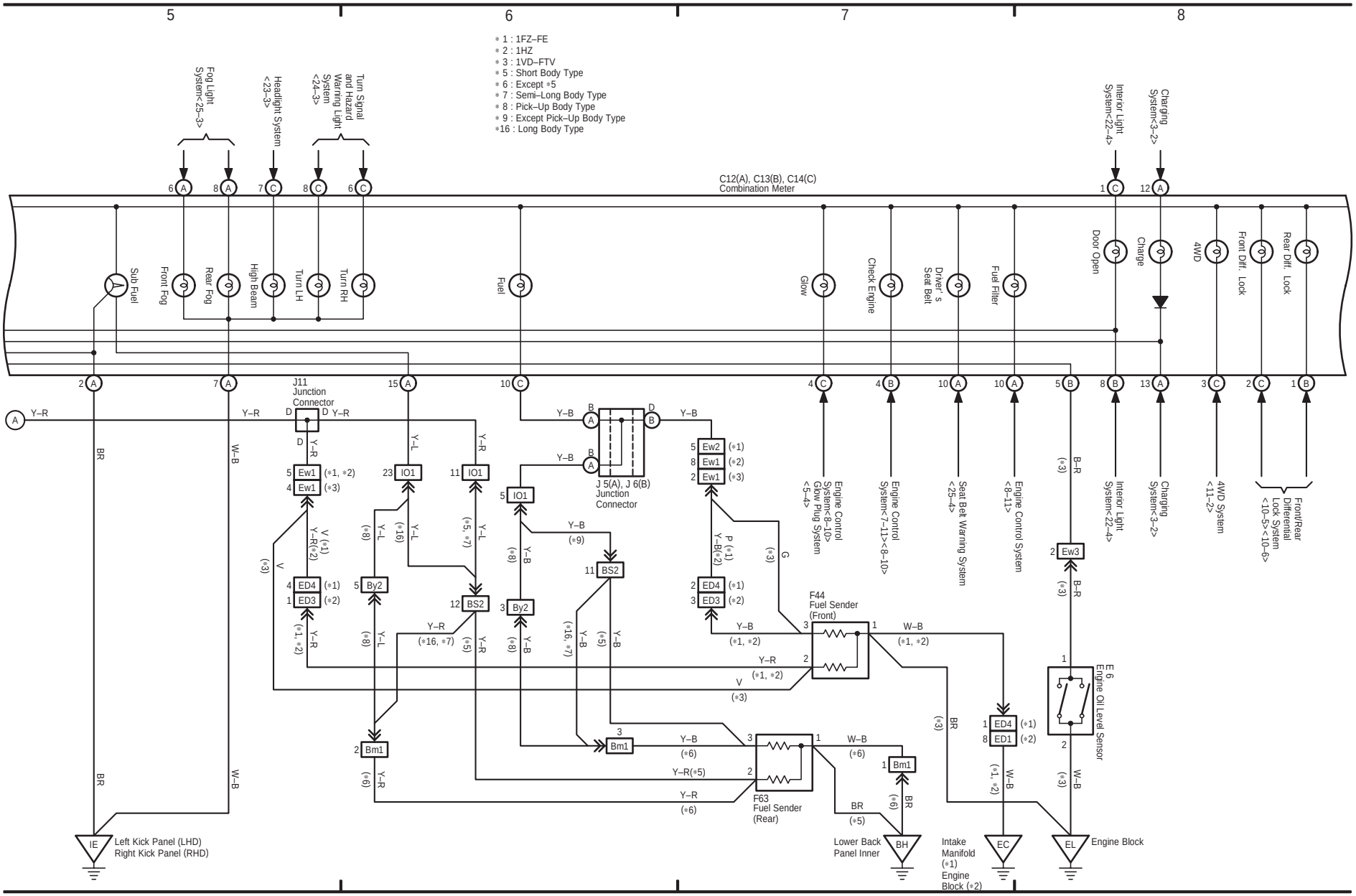
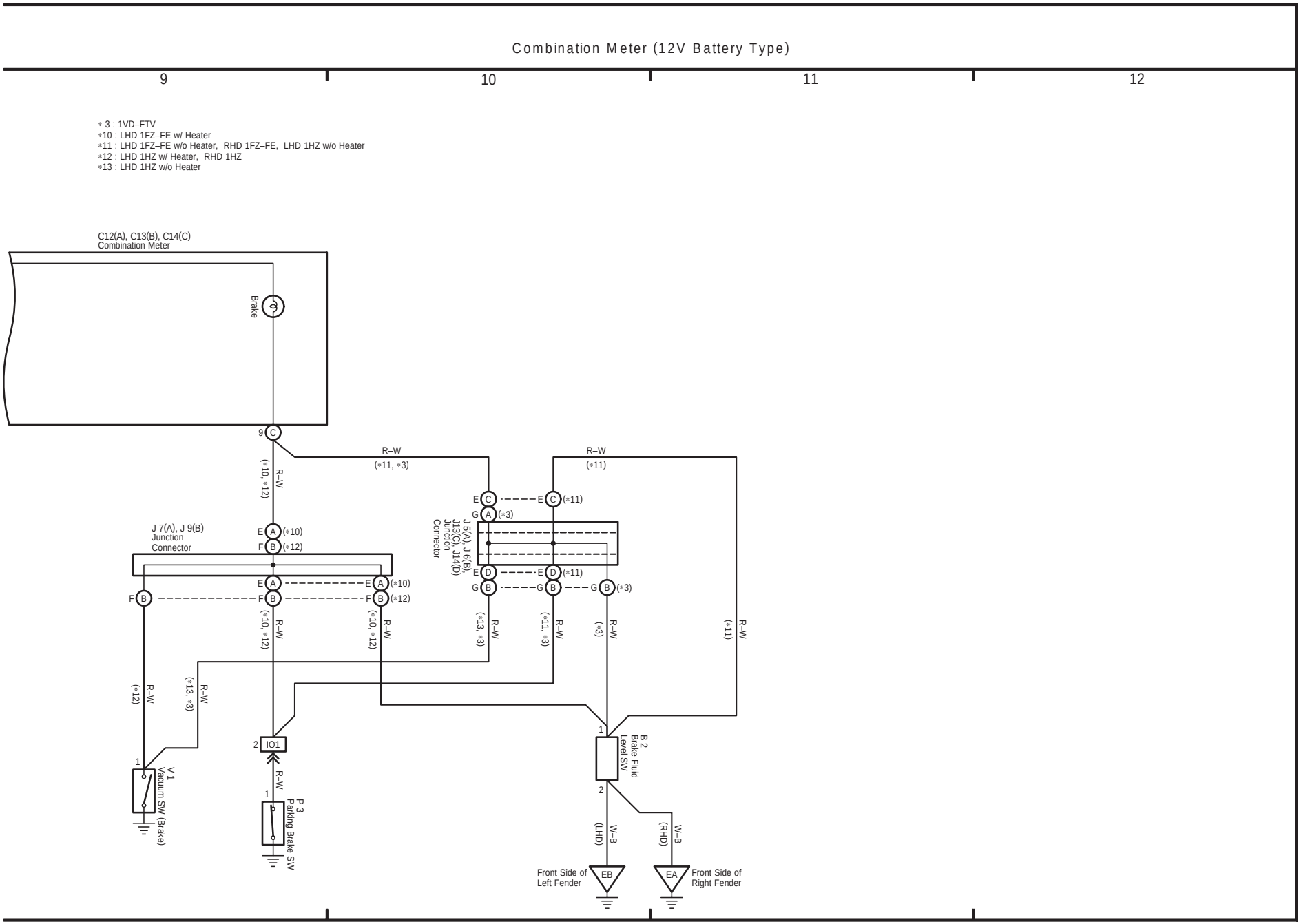
29 LAND CRUISER (Cont' d)