PROCEDURE

1.INSPECT PARKING BRAKE LEVER TRAVEL

a. Fully pull the parking brake lever to engage the parking brake.

b. Release the lever to disengage the parking brake.

c. Slowly pull the parking brake lever all the way and count the number of clicks.

Standard parking brake lever travel when pulled with a force of 196 N (20 kgf, 44 lbf):
7 to 9 clicks

If the parking brake lever travel is not as specified, adjust the parking brake shoe clearance and parking brake lever travel.

2.REMOVE REAR WHEEL

Click hereSuspension>TIRE / WHEEL>TIRE AND WHEEL>REMOVAL

3.REMOVE REAR CONSOLE BOX SUB-ASSEMBLY 58901A

Click hereVehicle Interior>INTERIOR PANELS / TRIM>REAR CONSOLE BOX>REMOVAL

4.REMOVE PARKING BRAKE LEVER COVER 46243

Click hereBrake>PARKING BRAKE>PARKING BRAKE LEVER>REMOVAL

5.ADJUST PARKING BRAKE LEVER TRAVEL (for Disc Type)

a. Completely release the parking brake lever.

b.

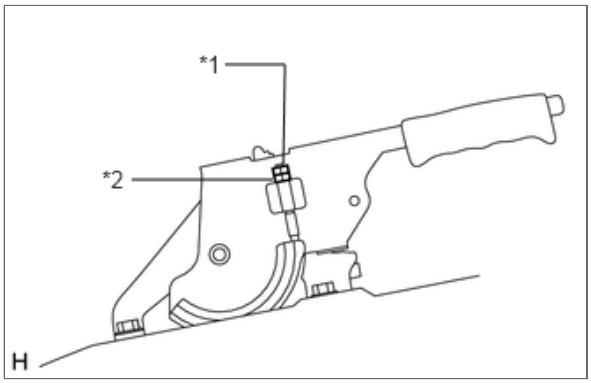

*1	Lock Nut
*2	Adjusting Nut

Loosen the lock nut and adjusting nut to completely release the parking brake cable.

c. Temporarily install the hub nuts.

d. Remove the hole plug.

e.

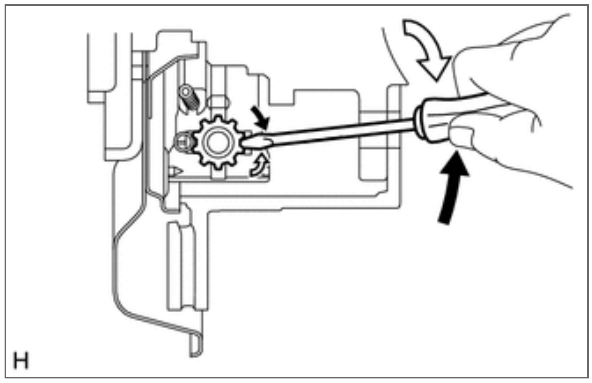

➡	Shoe Adjuster Contracts
⇨	Shoe Adjuster Expands

Turn the shoe adjuster so that it expands until the disc locks.

f. Turn the shoe adjuster so that it contracts until the disc can rotate smoothly.
OK:
8 notches

g. Check that there is no brake drag against the shoe.

h. Install the hole plug.

i. Remove the hub nuts.

j.

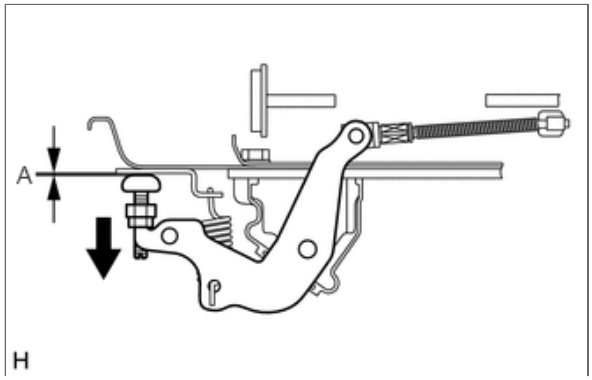

➡	Pull

Lightly pull the bell crank.

k. Check that there is no looseness in the parking brake cable.

l. Adjust the gap between the stopper bolt and the backing plate.
Gap A:
0.5 to 0.9 mm (0.0197 to 0.0354 in.)

m. Lock the adjust bolt with the lock nut.
Torque:
5.0 N*m (51 kgf*cm, 44 in.*lbf)

n. Turn the adjusting nut until the parking brake lever travel becomes correct.

Standard parking brake lever travel when pulled with a force of 196 N (20 kgf, 44 lbf):
7 to 9 clicks

o. Using a wrench or an equivalent tool, hold the adjusting nut and tighten the lock nut.

Torque:
5.4 N*m (55 kgf*cm, 48 in.*lbf)

p. Operate the parking brake lever 3 to 4 times and check the parking brake lever travel.

Standard parking brake lever travel when pulled with a force of 196 N (20 kgf, 44 lbf):
7 to 9 clicks

q. Check whether the parking brake drags or not.

r. When operating the parking brake lever, check that the brake warning light comes on.

Standard Condition:
The brake warning light always illuminates at the first click.

6.INSTALL PARKING BRAKE LEVER TRAVEL (for Drum Type)

a. Completely release the parking brake lever.

b.

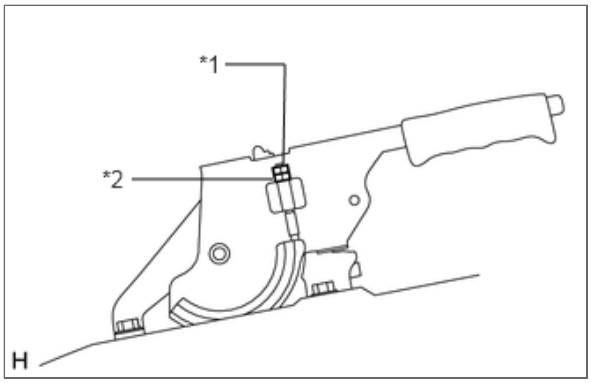

*1	Lock Nut
*2	Adjusting Nut

Loosen the lock nut and adjusting nut to completely release the parking brake cable.

c. Temporarily install the hub nuts.

d. Remove the hole plug.

e.

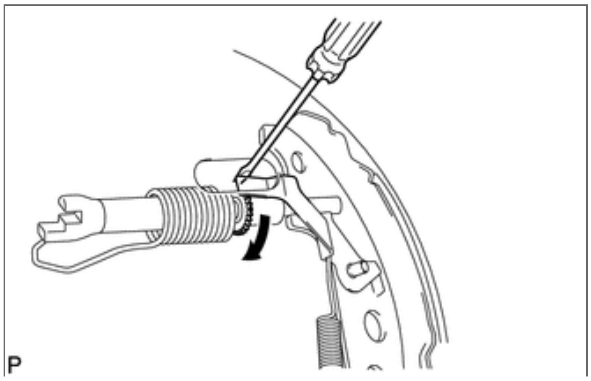

➡	Expand

Turn the adjuster to expand the shoe until the drum locks.

f.

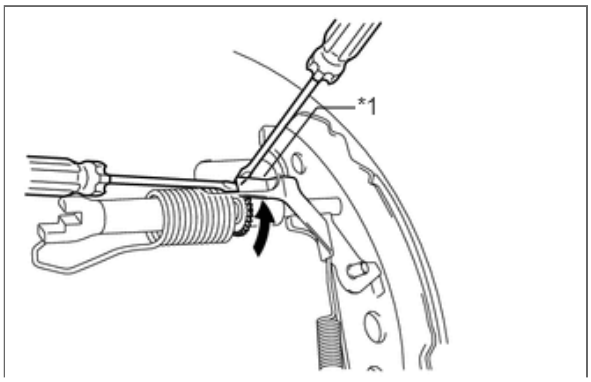

*1	Automatic Adjust Lever
➡	Contract

Hold the automatic adjust lever away the adjuster, and contract the brake shoe by turning the adjust bolt using another screwdriver until the drum can rotate smoothly.

g.

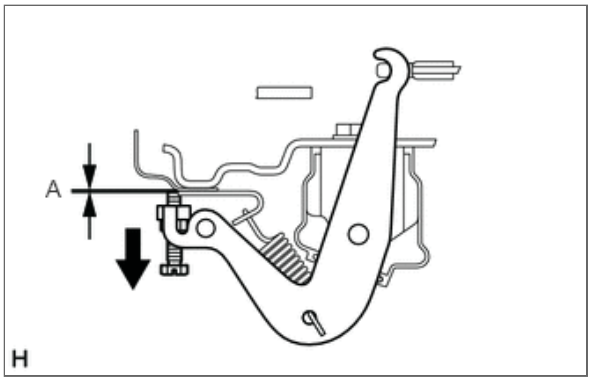

➡	Pull

Lightly pull the bell crank.

h. Check that there is no looseness in the parking brake cable.

i. Adjust the gap between the stopper bolt and the backing plate.

Gap A:
0.5 to 0.9 mm (0.0197 to 0.0354 in.)

j. Lock the adjust bolt with the lock nut.

Torque:
5.0 N*m (51 kgf*cm, 44 in.*lbf)

k. Install the hole plug.

l. Remove the hub nuts.

m. Turn the adjusting nut until the parking brake lever travel becomes correct.

Standard parking brake lever travel when pulled with a force of 196 N (20 kgf, 44 lbf):
7 to 9 clicks

n. Using a wrench or an equivalent tool, hold the adjusting nut and tighten the lock nut.

Torque:
5.4 N*m (55 kgf*cm, 48 in.*lbf)

o. Operate the parking brake lever 3 to 4 times and check the parking brake lever travel.

Standard parking brake lever travel when pulled with a force of 196 N (20 kgf, 44 lbf):
7 to 9 clicks

p. Check whether the parking brake drags or not.

q. When operating the parking brake lever, check that the brake warning light comes on.

Standard Condition:
The brake warning light always illuminates at the first click.

7.INSTALL PARKING BRAKE LEVER COVER 46243

Click hereBrake>PARKING BRAKE>PARKING BRAKE LEVER>INSTALLATION

8.INSTALL REAR CONSOLE BOX SUB-ASSEMBLY 58901A

Click hereVehicle Interior>INTERIOR PANELS / TRIM>REAR CONSOLE BOX>INSTALLATION

9.INSTALL REAR WHEEL

Click hereSuspension>TIRE / WHEEL>TIRE AND WHEEL>INSTALLATION

© 2012 TOYOTA MOTOR CORPORATION. All Rights Reserved.